Ampco Centrifugal Pumps

Data Sheet

Model MC3 2½x2

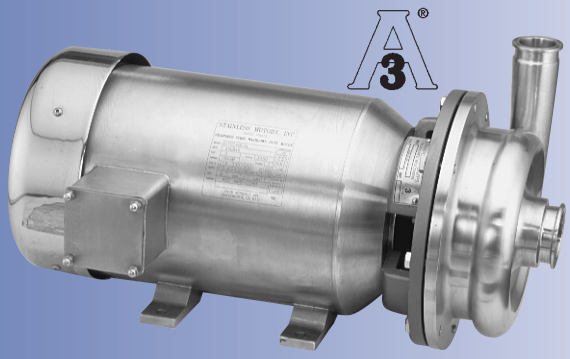

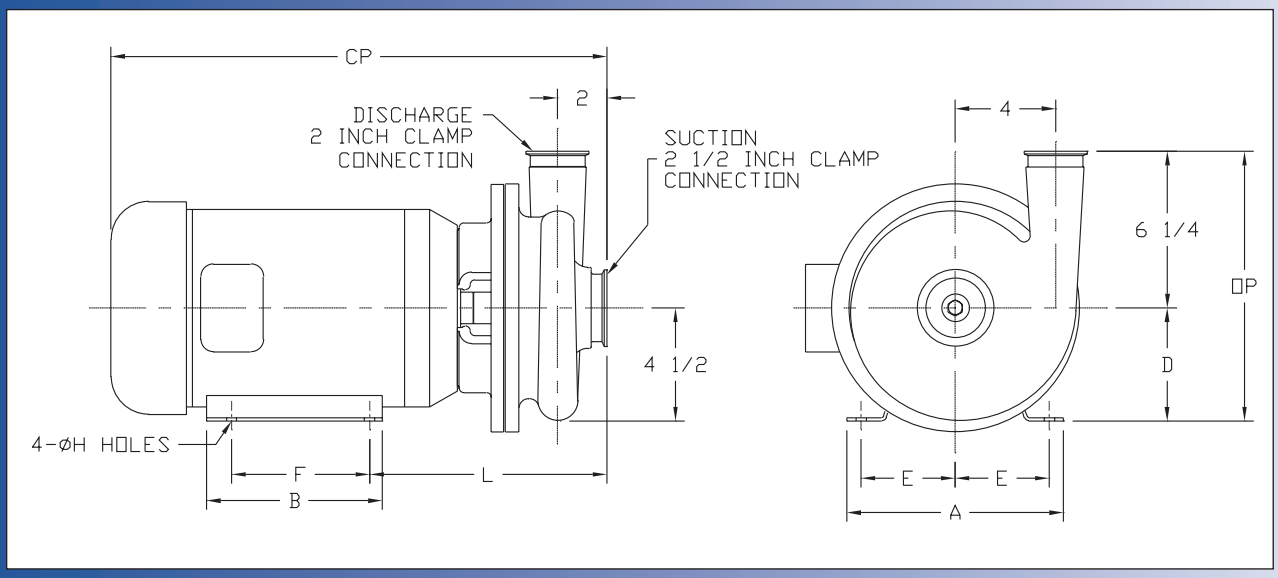

TEFC MOTOR			DIMENSIONS IN INCHES (For Reference Only)									APPROX. WEIGHT (LBS)
HP	RPM	FRAME	A (typ)	B (typ)	D	E	F	H	L	CP	OP	
1	1750	143JM	6-1/2	6	3-1/2	2-3/4	4	11/32	8-7/8	17-3/16	9-3/4	88
1-1/2	1750	145JM	6-1/2	6	3-1/2	2-3/4	5	11/32	8-7/8	17-3/16	9-3/4	92
2	1750	145JM	6-1/2	6	3-1/2	2-3/4	5	11/32	8-7/8	17-3/16	9-3/4	97
2	3500	145JM	6-1/2	6	3-1/2	2-3/4	5	11/32	8-7/8	17-3/16	9-3/4	97
3	3500	145JM	6-1/2	6	3-1/2	2-3/4	5	11/32	8-7/8	17-3/16	9-3/4	100
5	3500	184JM	8-5/8	6-1/2	4-1/2	3-3/4	4-1/2	13/32	9-1/2	20-3/32	10-3/4	126
7-1/2	3500	184JM	8-5/8	6-1/2	4-1/2	3-3/4	5-1/2	13/32	9-1/2	21-19/32	10-3/4	145
10	3500	215JM	9-1/2	8	5-1/4	4-1/4	7	13/32	10-1/2	21-19/32	11-1/2	184
15	3500	215JM	9-1/2	8	5-1/4	4-1/4	7	13/32	10-1/2	22-23/32	11-1/2	207

MATERIAL SPECIFICATIONS

PART NAME	STAINLESS STEEL
Casing & Cover	316L Stainless
Impeller	316L Stainless
Motor Shaft	Steel
Shaft Sleeve	316L Stainless
Adapter	Cast Iron

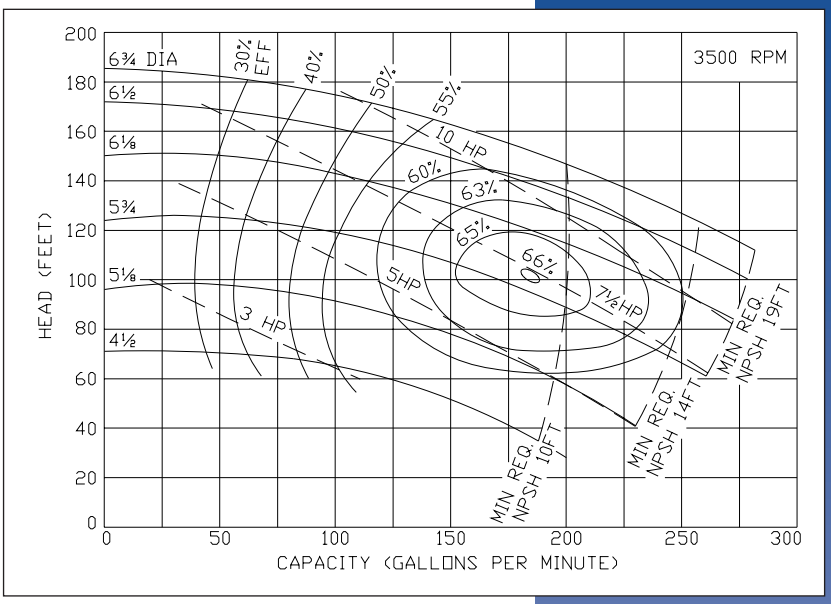

Ampco Centrifugal Pumps

Model MC3 2½ x 2

Curves show approximate characteristics based on clear 68° water. Rated point is guaranteed.

MC3/MCH3 pumps are in conformance with 3A sanitary standards for centrifugal pumps for milk and milk products, Number 02-09.

Standard M Series pumps have a 32RA (150 grit) finish, on all product contact surfaces.

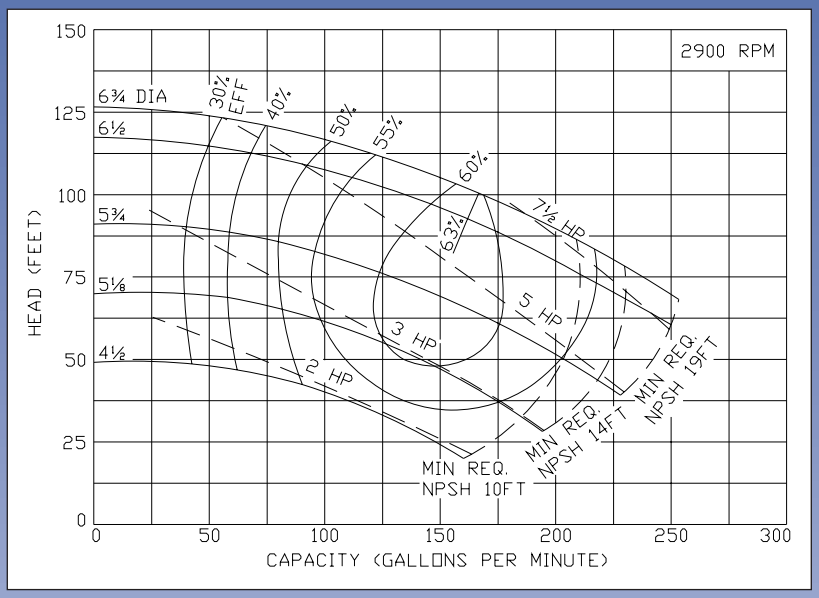

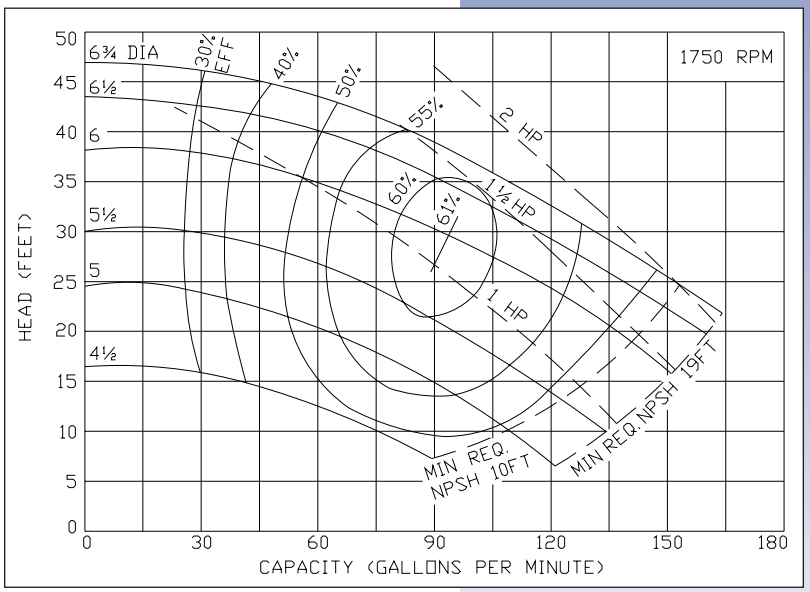

Ampco Pumps Company

4424 West Mitchell Street
Milwaukee, Wisconsin 53214
PHONE (414) 643-1852
FAX (414) 643-4452