Ampco Centrifugal Pumps

Data Sheet

Model EC 2½ x 2

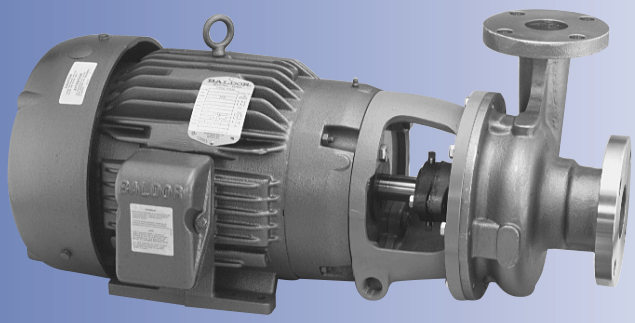

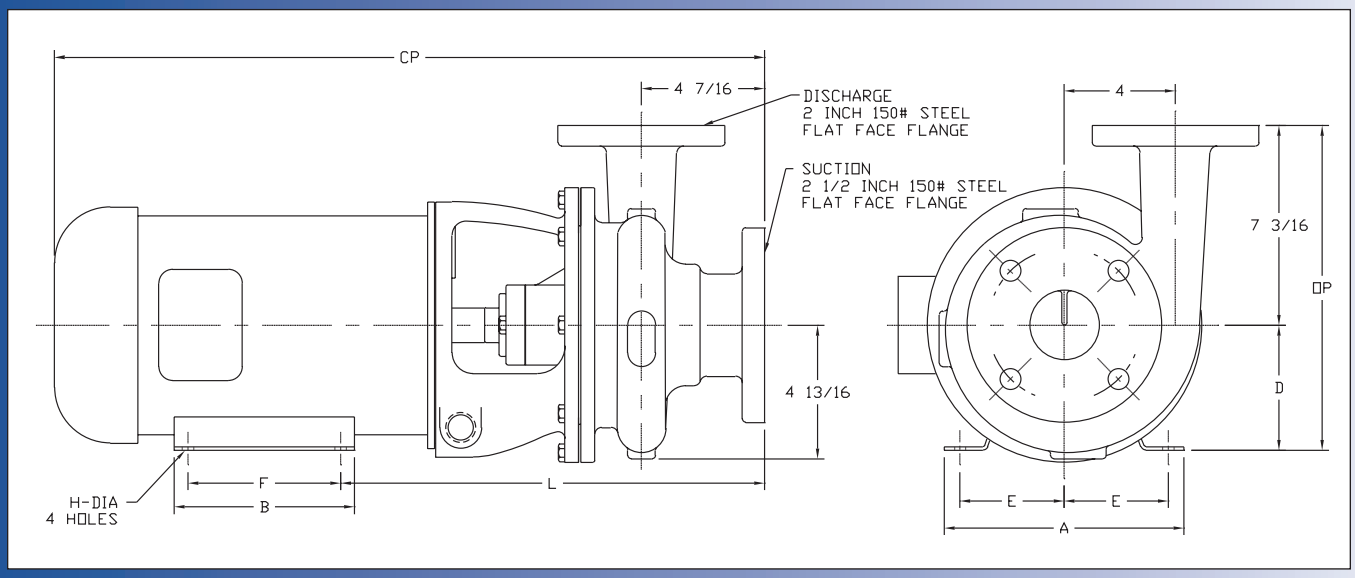

TEFC MOTOR			DIMENSIONS IN INCHES (For Reference Only)									APPROX. WEIGHT (LBS)
HP	RPM	FRAME	A (typ)	B (typ)	D	E	F	H	L	CP	OP	
3	1750	182TCZ	8-5/8	6-1/2	4-1/2	3-3/4	4-1/2	13/32	14-9/16	24-5/8	11-11/16	166
5	3500	184TCZ	8-5/8	6-1/2	4-1/2	3-3/4	5-1/2	13/32	14-9/16	24-5/8	11-11/16	179
7-1/2	3500	213TCZ	9-1/2	8	5-1/4	4-1/4	5-1/2	13/32	15-3/16	26-1/2	12-7/16	246
10	3500	215TCZ	9-1/2	8	5-1/4	4-1/4	7	13/32	15-3/16	26-1/2	12-7/16	265
15	3500	215TCZ	9-1/8	8	5-1/4	4-1/4	7	13/32	15-3/16	27-5/8	12-7/16	362

MATERIAL SPECIFICATIONS

PART NAME	NICKEL ALUMINUM BRONZE	STAINLESS STEEL
Casing, Cover & Impeller	AMPCO® 483	316 Stainless
Wear Ring	AMPCO® 18	316 Stainless
Motor Shaft	Steel	Steel
Shaft Sleeve	AMPCO® 18	316 Stainless
Adapter	Cast Iron	Cast Iron

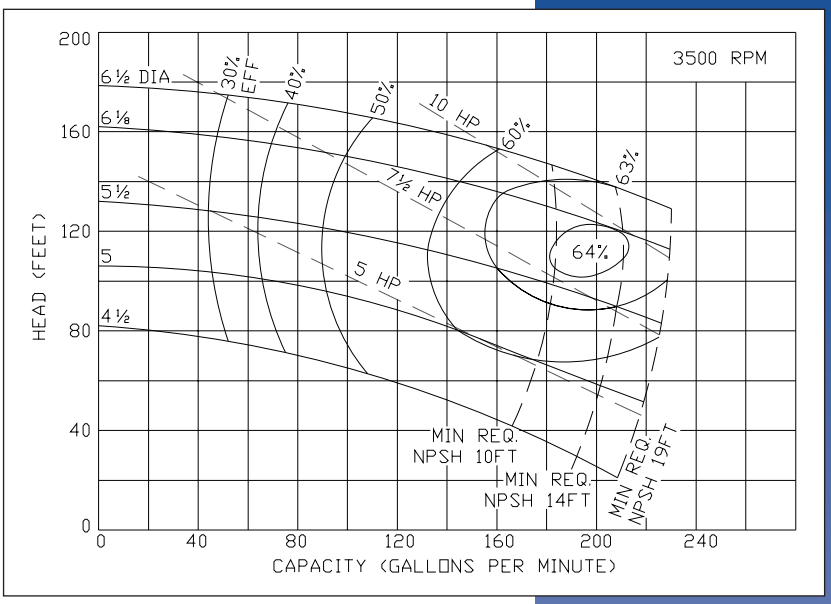

Ampco Centrifugal Pumps

Model EC 2½ x 2

Curves show approximate characteristics based on clear 68° water. Rated point is guaranteed.

E Series pumps provide the same heavy-duty construction and hydraulic performance as Ampco's Z Series.

An enlarged stuffing box offers multiple sealing arrangements, including Type 21, Type 1, Type 9, Double Type 21, Double Type 9, packing and cartridge seals.

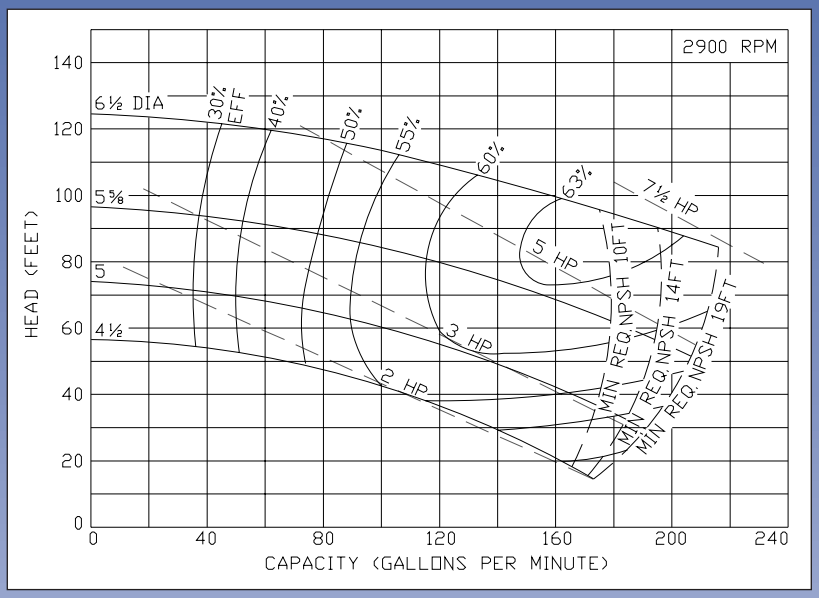

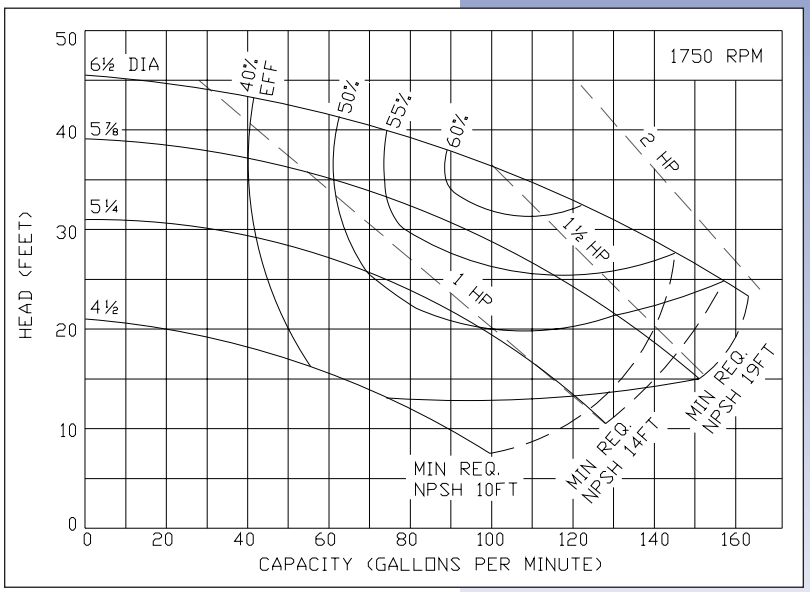

Ampco Pumps Company

4424 West Mitchell Street
Milwaukee, Wisconsin 53214
PHONE (414) 643-1852
FAX (414) 643-4452